Optizone

High Power Polarization Maintaining Optical Circulator (Ultra-Fast Fiber Lasers)

Features

Low Insertion Loss
High Return Loss
High Extinction Ratio
High Power

Applications

Ultra-Fast Fiber Lasers
Fiber Optic Instruments
Fiber Sensors
Coherent Detecting
Research

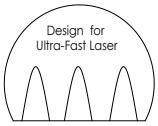

Specifications

Parameters	Unit	Values	
Package Type		C6	C116
Center Wavelength (λc)	nm	1030、1064 or Specify	
Typ. Peak Isolation (2 to1, 3 to 2)	dB	28	
Min. Isolation at 23℃ (2 to 1, 3 to2)	dB	25	
Typ. Insertion Loss at 23℃ (1 to 2, 2 to3)	dB	1.2	
Max. Insertion Loss at 23℃ (1 to 2, 2 to 3)	dB	1.6	
Min. Extinction Ratio at 23℃	dB	20	
Min. Cross Talk	dB	50	
Min. Return Loss	dB	50	
Max. Optical Average Power	W	1、3 or Specify	5、10、20 or Specify
Max. Peak Power for ps Pulse	kW	500 or Specify	1000 or Specify
Max. Tensile Load	N	5	
Operating Temperature	℃	+10 to +50	
Storage Temperature	℃	0 to+75	

*For pulse applications, pls discuss with Optizone Technology.
*The PM fiber and the connector key are aligned to the slow axis.
*Above specifications are for device without connector.
*For devices with connectors, IL will be 0.5dB higher, RL will be 5dB lower,and ER will be 2dB lower & handling Power will be only 1W(CW).
*The maximum power is the sum of the powers in the forward and backward directions.
*The material must be RoHS compliant.

Package Dimensions

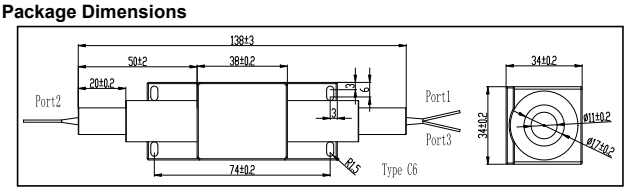

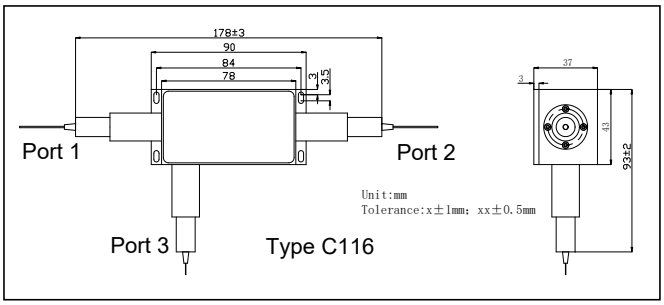

Ordering Information

HPMCIR-UF-①①-②②②-③③-④-⑤⑤⑤-⑥⑥⑥-⑦-⑧⑧⑧

①①: Wavelength
03 - 1030nm
06 - 1064nm
SS - Specify

②②②: Package Type
C6 - Type C6
C116 - Type C116

③③: Handling Power
01 - 1W
03 - 3W
05 - 5W
10 - 10W
20 - 20W
SS - Specify

④: Port Configuration
1 - 1x2

⑤⑤⑤: Connector Type on Port 1、2 & 3
1 - FC/UPC
2 - FC/APC
3 - SC/UPC
4 - SC/APC
N - None
SSS - Specify

⑥⑥⑥: Fiber Jacket on Port 1 、2 & 3
A - 3mm Armoured Cable
B - Bare Fiber
C - 3mm Loose Cable
L - 900um Loose Tube
SSS - Specify

⑦: Fiber Length
0.8 - 0.8m
SSS - Specify

⑧⑧⑧: Fiber Type
1 - PM 980 Fiber
45 - Nufern PLMA -GDF-10/125-M NA0.075 Fiber
65 - Nufern PM1060L 10/125 GSF NA0.085 Fiber
79 - YSL PM 10/125 NA0.085 Fiber
SSS - Specify